NEWOPTO
鑫 永 诚 光 电

深 圳 市 鑫 永 诚 光 电 科 技 有 限 公 司
Shenzhen Newopto photoelectric Technology Co., Ltd.

产 品 承 认 书
SPEC FOR APPROVAL

客户名称 Customer	
产品型号 Model	XYC-IR5C940AC-X4
承认编号 Part No.	IR192-B
编制日期 Edit Date	2017-09-18

核准(Approval)	审核(Check)	编制(Edit)
谭起富	丁杰	陈创

客户确认(Customer Signatures)		

地址：深圳市宝安区福永镇大洋田福安第三工业城三期二栋
Address:Bldg 1,3rd Phase,Fu'an Industrial City,Dayangtian,Fuyong Town,Baoan District,Shenzhen,China
电话(Tel):0755—81459333 网址(Web site):http//www.xycgd.com
传真(Fax):0755—29580358 邮箱(E-mail):xycgd888@163.com

NEW OPTO

目录 Contents

封面 cover 1

产品信息 Product information 3

额定参数 Absolute Maximum Ratings (Ta=25℃) 4

光电特性 Elector-Optical Characteristics (Ta=25℃) 4

可靠性试验 Reliability Test 5

光电特性曲线 Typical photoelectric characteristics curves 6

产品外型尺寸 Product dimensions 7

包装规格 Packing Specification 8

焊接 Soldering 9

使用注意事项 Precautions 11

NEW OPTO

地址：深圳市宝安区福永镇大洋田福安第三工业城三期二栋
Add ：Bldg 1,3rd Phase,Fu'an Industrial City,Dayangtian,Fuyong Town,Baoan District,Shenzhen,China
电话(Tel):0755—81459333 网址(Web site):http//www.xycgd.com
传真(Fax):0755—29580358 邮箱(E-mail):xycgd888@163.com

鑫永诚 IR940 红外 LED 是一款低功耗，插件式外型封装的二极管，它具有发射功率强、受光角度均匀等优点。NEW OPTO IR940 infrared LED is a low power consumption diode in DIP package. This model has the advantages of strong transmitting power and uniform light angle.

特性 Features

- 峰值波长 940nm Peak wavelength λp=940nm
- 高可靠性 High reliability
- 低功耗 Low Power Consumption
- 符合 RoHS RoHS compliant

应用 Applications

- 红外摇控发射电子产品 Infrared remote control transmitter electronic products
- 遥控器信号发射 Signal Emitting of Remote control
- 安防摄像头和网络摄像头补光 CCTV and IP Camera
- 信号传输 Signal transmission

量身订制 Customization

- 品种齐全,生产周期短,小批量库存备货
  Complete varieties, short production cycle , small batch inventory
- 可按要求提供不同外型,角度，方便安装于产品的任何位置
  Customize different shapes and angles
- 可按需求提供最佳的规格，以便让产品效果更好，更具市场竞争力
  Customize most suitable specifications to make the product be more competitive

NEW OPTO

地址：深圳市宝安区福永镇大洋田福安第三工业城三期二栋
Add ：Bldg 1,3rd Phase,Fu'an Industrial City,Dayangtian,Fuyong Town,Baoan District,Shenzhen,China
电话(Tel):0755—81459333 网址(Web site):http//www.xycgd.com
传真(Fax):0755—29580358 邮箱(E-mail):xycgd888@163.com

额定参数 Absolute Maximum Ratings (Ta=25℃)

电气特性 Electrical characteristics	符号 Symbol	额定值 Rated Value	单位 Unit
持续工作电流 Continuous Forward current	IF	80	mA
最大脉冲工作电流* Peak Forward current	IFP	1000	mA
反向击穿电压 Reverse breakdown voltage	VR	5	V
最大功耗 Power dissipation	Pd	100	mW
工作温度 Operating Temperature	Topr	-30--+85	°C
储存温度 Storage Temperature	Tstg	-40--+100	°C

Note：* Pulse width≦100μs, Duty≦1%

光电特性 Optical Characteristics (Ta=25℃)

参数 Parameter	符号 Symbol	测试条件 Test Condition	最小 Min.	典型 Typ.	最大 Max.	单位 Unit
发射波长 Wavelength	λp	IF=20mA	--	940	--	nm
辐射强度 Radiant Intensity	Ie	IF=80mA	12	18	--	mW\sr
		IF=500mA (Pulse) Pulse width≦100μs, Duty≦1%	--	112	--	mW\sr
		IF=1000mA (Pulse) Pulse width≦100μs, Duty≦1%	--	224	--	mW\sr
工作电压 Forward Voltage	VF	IF=40mA	--	1.35	1.5	V
		IF=100mA	--	1.45	1.6	V
		IF=500mA (Pulse) Pulse width≦100μs, Duty≦1%	--	1.7	2.0	V
反向电流 Reverse current	IR	VR=5V	--	--	10	μA
发射角度 View Angle	2θ½	IF=20mA	--	60	--	deg
全功能角 Full functional Angle	θ	IF=20mA	--	90	--	deg

可靠性试验 Reliability Test

测试项目 Test Parameter	参考标准 Reference Criterion	测试条件 Test Condition	时间 Time	样品数 Quantity	Ac/Re
耐焊接热 Resistance to Solder Heat	JESD22-B106	260℃±5℃	10 sec	22PCS	0/1
冷热循环 temperature cycle	JESD22-A104	+100℃(15min) 5min -10℃(15min)	50 cycles	22PCS	0/1
冷热冲击 Thermal Shock	JESD22-A104	+105℃(30min) 5min -45℃(30min)	50 cycles	22PCS	0/1
高温贮存 High Temperature storage	JESD22-A103	+100℃	1000H	22PCS	0/1
低温贮存 Low Temperature storage	JESD22-A119	-40℃	1000H	22PCS	0/1
寿命测试 Life Test	JESD22-A108	IF=100mA	1000H	22PCS	0/1
高温高湿 High Temperature and High Humidity Test	JESD22-A101	85℃ & 85%R.H	1000H	22PCS	0/1

NEW OPTO

光电特性曲线 Typical elector-optical characteristics curves

光谱分布特性曲线
Relative Spectral Distribution

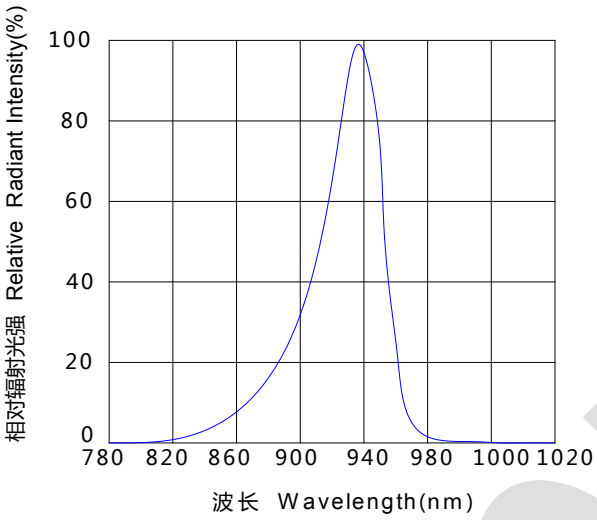

温度VS电流曲线
Forward Current Derating Curve

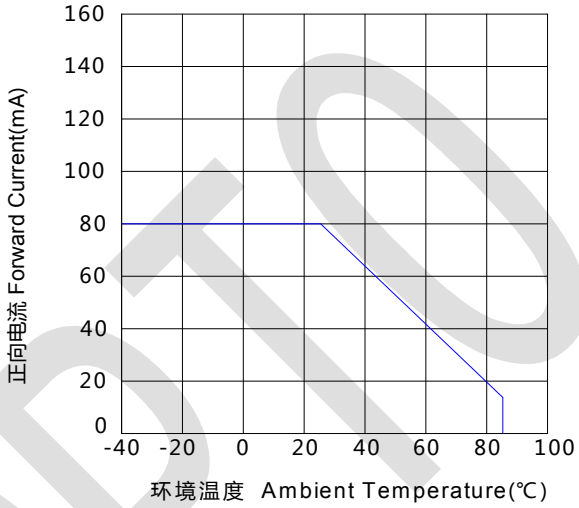

电流vs电压曲线图
Current & Voltage Curve

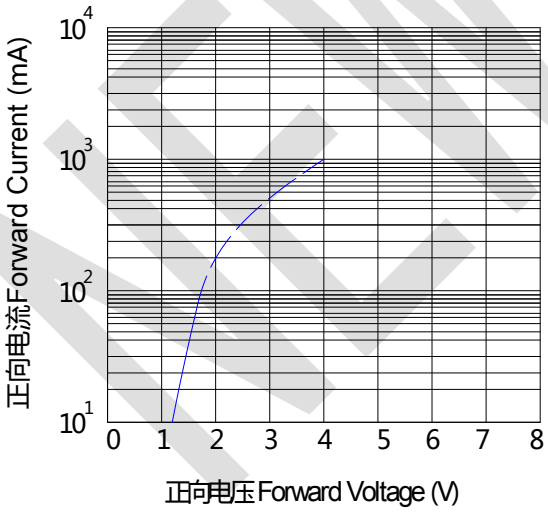

辐射光强分布特性曲线
Radiant Intensity Spatial Distribution

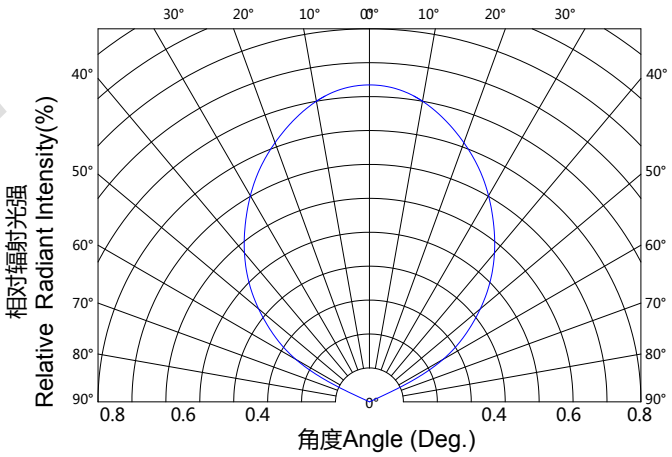

地址：深圳市宝安区福永镇大洋田福安第三工业城三期二栋
Add ：Bldg 1,3rd Phase,Fu'an Industrial City,Dayangtian,Fuyong Town,Baoan District,Shenzhen,China
电话(Tel):0755—81459333 网址(Web site):http//www.xycgd.com
传真(Fax):0755—29580358 邮箱(E-mail):xycgd888@163.com

产品外型尺寸 Product dimension

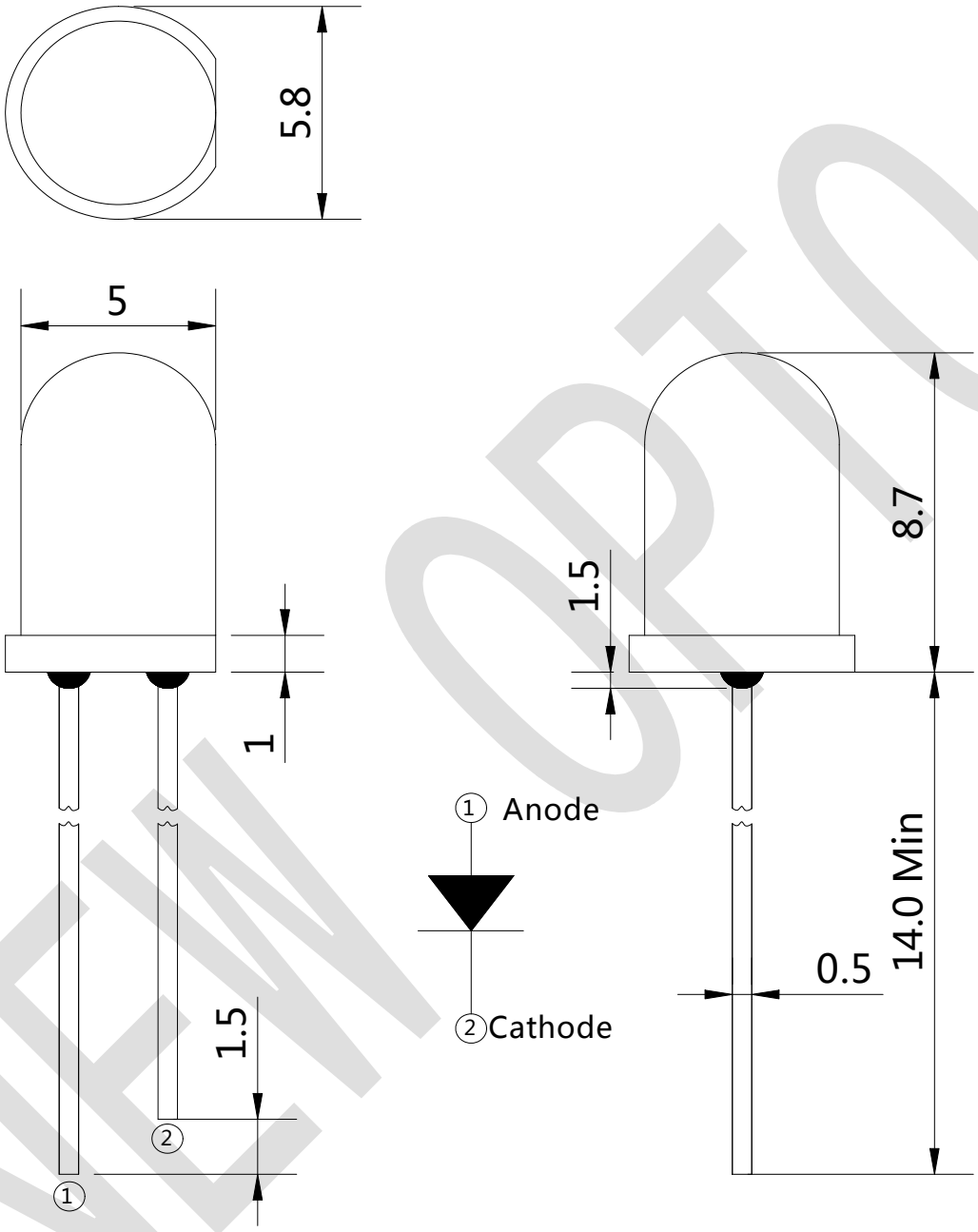

备注：所有尺寸单位均为 mm，如无特殊说明误差范围为±0.15mm

Note：All dimensions in mm,tolerance is ±0.15mm unless otherwise noted

地址：深圳市宝安区福永镇大洋田福安第三工业城三期二栋
Add ：Bldg 1,3rd Phase,Fu'an Industrial City,Dayangtian,Fuyong Town,Baoan District,Shenzhen,China
电话(Tel):0755—81459333 网址(Web site):http//www.xycgd.com
传真(Fax):0755—29580358 邮箱(E-mail):xycgd888@163.com

包装规格 Packing Specification

■ 标签规格 Label specification

NEW OPTO 鑫永诚光电 深圳市鑫永诚光电科技有限公司

Tel：0755-29580458 Fax：0755-29580358
http://www.xycgd.com

料号	Material Number
型号	Model Number
单号	Lot.Number
箱号	Box Number
数量	Quantity
日期	Date

RoHS

■ 静电袋包装

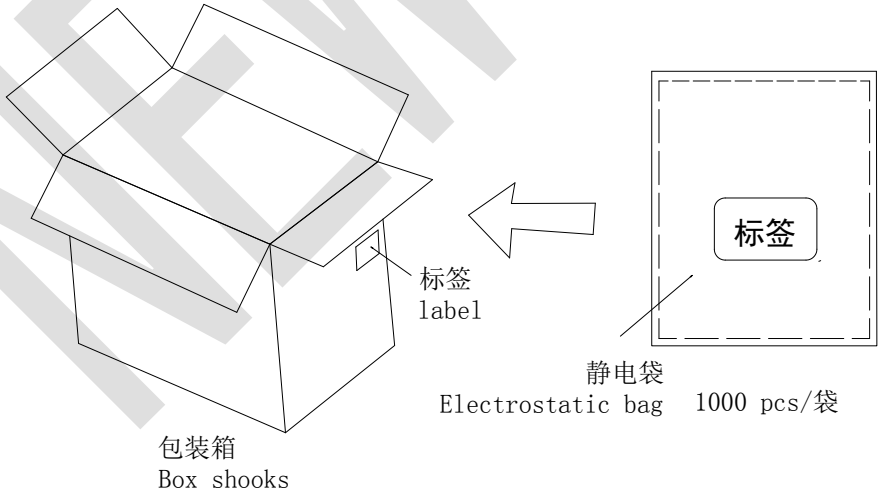

地址：深圳市宝安区福永镇大洋田福安第三工业城三期二栋
Add ：Bldg 1,3rd Phase,Fu'an Industrial City,Dayangtian,Fuyong Town,Baoan District,Shenzhen,China
电话(Tel):0755—81459333 网址(Web site):http//www.xycgd.com
传真(Fax):0755—29580358 邮箱(E-mail):xycgd888@163.com

焊接 Soldering

焊接过程中的不慎操作将会引起产品的损坏，请务必注意。焊接过程中应避免对产品支架或封装部分施加压力。焊接时，请保证焊接位置与封装树脂底部有一定的距离，该距离因不同的焊接方法而有所不同，请参照以下推荐焊接条件。

Damages may be caused during soldering,please be careful. Please note that don't put stress on product bracket or package part when soldering.And make sure keep some distance from soldering joint to the bottom of epoxy package when soldering.The distance is determined by different soldering techniques,it's recommended to take following soldering conditions as reference.

推荐焊接条件 Recommended Soldering Conditions

焊接模式 Mode		固定形式 Fixed form
手工焊接 Manually Soldering	烙铁温度 Soldering Iron Temperature	最高温度 300℃(功率最大 30 瓦) 300℃ Max(30w Max)
	焊接时间 Soldering Time	时间不超过 3 秒 3 sec Max
	焊接位置 Soldering Position	大于 3mm (从焊点到胶体) 3mm Min.(Form soldering joint to colloid)
波峰焊接 Wave Soldering	预热 Preheat	最高温度 100℃ 不超过 60 秒 100℃ Max.60 sec.Max
	温度 Temperature	最高 260℃ 260℃ Max.
	焊接时间 Soldering Time	不超过 5 秒 5 sec Max
锡炉焊接 Solder pot Soldering	预热 Preheat	最高温度 100℃ 不超过 60 秒 100℃ Max.60 sec.Max
	浸焊温度 Preheat Temperature	最高 260℃ 260℃ Max.
	浸焊时间 Soldering Time	不超过 5 秒 5 sec Max
	焊接位置 Soldering Position	大于 2mm (从焊点到胶体) 2mm Min.(From soldering joint to colloid)

地址：深圳市宝安区福永镇大洋田福安第三工业城三期二栋
Add ：Bldg 1,3rd Phase,Fu'an Industrial City,Dayangtian,Fuyong Town,Baoan District,Shenzhen,China
电话(Tel):0755—81459333 网址(Web site):http//www.xycgd.com
传真(Fax):0755—29580358 邮箱(E-mail):xycgd888@163.com

- 本产品不适合做回流焊接。

  It's unsuitable for reflow soldering.

- 手工焊接只可焊接一次。

  Manually soldering should be done once only

- 器件外部温度在 40℃以下时，才可以对其进行处理。避免高温时操作对 LED 造成损伤。

  Please solder the LED under 40 degree to avoid high temperature damage the device

- 在焊接温度回到正常以前，必须避免使 LED 受到任何震动或外力

  After soldering the LED ,please keep it out of any shake or outer force before it come to normal temperature

- 在焊接后推荐使用酒精进行清洗，在温度不高于 30℃的条件下持续 1 分钟，不高于 50℃的条件下持续 30 秒。使用其他类似溶剂清洗前，请先确认使用的溶剂不会对 LED 的封装和环氧树脂部分造成损伤。

  It is recommended that to use alcohol clean LED after soldering.Cleaning should be done under 30℃ for 1 minute or 50℃ for 30 seconds.When using other solvents,please confirm whether the solvents would dissolve the package or resin beforehand .

注意：此一般指导原则并不适用于所有 PCB 设计和焊接设备的配置。具体工艺受到诸多因素的影响，请根据特定的 PCB 设计和焊接设备来确定焊接方案。

Note：This general guideline may not suitable for all PCB designs or all soldering equipment configurations .The technique in practice is influenced by many factors.Please confirm soldering method by the PCB designs and configurations.

NEW OPTO

使用注意事项 Precautions

感谢您使用深圳市鑫永诚光电科技有限公司的 LED 系列产品，为增进您对我司产品特性的了解，也为方便您快速掌握产品的基本操作，为尽量减少或避免因人为等因素造成不必要的产品损坏，使其能够更好的为您的生产服务，特针对使用过程中的一些规范使用作相应说明，同时即使是同一规格 LED，在实际应用领域其可靠性与整体系统设计水平、作业方式、使用条件均相关。本使用说明不可能涵盖客户使用过程中可能碰到的所有问题，由此带来的不便，敬请谅解！

Thanks for using relevant LED products of Shenzhen Newopto Photoelectric Technology Co., Ltd. In order to enhance your understanding of the characteristics of our products, as far as reduce and avoid unnecessary damage of product due to man made factors ,and make the product serve your production better , we provide corresponding operation standard instructions . At the same time, even if you are using the same specifications LED, its reliability is related to overall system design level ,mode of operation and conditions of use in the practical application field . This Instructions didn’t cover all questions customers may encounter during using, we sincerely apologize for any inconvenience this may cause！

- 产品声明 Product Declaration
  - 使用本产品之前，请贵司务必预先进行测试，以便确认是否适合使用目的，产品介绍的用途并不保证不抵触任何专利，有关 LED 产品的进出口法律责任应由客户担负，请预先查清每个国家或地区的有关规定，产品可能会因性能提供或规格参数改变等缘故，恕不经预告更改，我们要求量产前签订正式的产品规格书

    In order to confirm the product is right for using purpose , pretest is necessary before use . We don’t guarantee the product application introduction don’t contravene any patent. The corresponding import and export legal responsibility should be taken by customers. Please verify relevant provision about the LED product in each country and district beforehand. We may change specifications from time to time in the interest of product development,without prior notification or public announcement. An agreement of formal product specifications is required prior to mass production.

- 储存 Storage
  - 在温度不高于 30℃，湿度不高于 60%RH 的条件下，产品保存期限为 6 个月。将产品保存在密封的容器中并附带干燥剂可以在一定程度上延续产品的储存日期。不良的储存条件会导致产品引脚的腐蚀或产品性能的改变。

    Under the storage conditions of 30℃ or less and humidity less than 60%RH, the storage period of LED is 6months. Store the products in sealed container with moisture absorbent material could prolong the storage time to a certain extent. Bad storage conditions may cause the LED pin corrode or LED characteristics be changed. It is recommended that the LEDs be used as soon as possible.

  - 开封后,产品必须 24 小时内使用完(建议工作环境温度不高于 30℃,湿度不高于 60%),如未使用完,余料须存放在温度不高于 30℃,湿度不高于 10%的环境中。

    After opening package, the product should be soldered within 24 hours. If not, please store at 30℃ or less and humidity less than 10%RH. It is recommended that the product be operated at the workshop condition of 30℃ or less and humidity less than 60%RH.

  - 对于尚未焊接的 LED,如果吸湿剂或包装失效,或者产品没有符合以上有效存储条件,烘烤可以起到一定的性能恢复效果. 烘烤条件:65±5℃,持续时间 24H。

For the LED doesn't solder ,if the moisture absorbent material lose efficacy or the storage condition doesn't conform to the above description,baking can help performance recovery in some extent.Backing condition : 65±5℃ for 24 hours.

■ 静电 Static electricity

- 静电和电涌会导致产品特性发生改变，例如正向电压降低等，如果情况严重甚至会损毁产品，所以在使用时必须采取有效的防静电措施。所有相关的设备和机器都应该正确的接地，同时必须采取其他防静电和电涌的措施。使用防静电手环，防静电垫子，防静电工作服，工作鞋，手套，防静电容器，都是有效的防止静电和电涌的措施。

  Static and electric surge would change the features of LED,such as decreasing of forward voltage.Even damages may occur in serious conditions.Please make sure adopt effective anti-static measures. All the relative devices and machinery must be properly grounded. At the same time, it is recommended to use anti-static wrist bands,anti-electrostatic gloves, anti-electrostatic containers and so on to prevent static and electric surge.

■ 设计建议 Design Consideration

- 设计电路时，通过 LED 的电流不能超过规定的最大值，同时还需要使用保护电阻，否则微小的电压变化将会引起较大的电流变化，可能导致产品损毁。

  When design the circuit, the voltage loaded on the both ends of the photosensitive LED tube should not exceed the specified maximum value,and the protect resistance should be used.Otherwise the tiny change of voltage would cause big current change and it may damage the product.

- LED 的特性容易因为自身的发热和环境的温度的改变而发生改变。温度的升高会降低 LED 的发光效率，影响发光颜色等，所以在设计时应充分考虑散热的问题。

  The characteristics of LED are easily to be effected by the heat of itself and the temperature changes of environment.The temperature increases would reduce the luminous efficiency and brightness etc.Please fully consider the heat dissipation when design.

■ 支架整形 Lead Forming

- 支架的整形必须在焊接之前进行。整形时，支架的弯曲位置必须至少在封装树脂底部 3mm 处，同时避免对同一位置进行多次的弯曲。

  Any lead forming must be done before soldering. When forming leads ,the leads should be bent at least 3mm from the base of the expose bulb. And avoid bending twice or even more at the same position.

- 整形时请使用合适的工具固定支架，避免对树脂施加压力。特别是不能管脚与树脂的连接部分作为支点，这样产生的应力会直接对产品内部的发光结构造成损伤，导致产品特性的改变甚至损毁。

  Please use proper tools to hold the leads.Avoid put press on resin especially don't regard connection part of pin and resin as fulcrum,the pressure caused by it would damage the inner part of product illumination structure,and would change the characters or even damage of the product.

- 基于同样的原因，在装配产品的时候，PCB 板上焊孔间的距离必须于产品的管脚间距严格匹配。

  For the same reason, when mounting the LED on to printed circuit board, the holes on the circuit board should be exactly aligned with the leads of the LED.

地址：深圳市宝安区福永镇大洋田福安第三工业城三期二栋
Add ：Bldg 1,3rd Phase,Fu'an Industrial City,Dayangtian,Fuyong Town,Baoan District,Shenzhen,China
电话(Tel):0755—81459333 网址(Web site):http//www.xycgd.com
传真(Fax):0755—29580358 邮箱(E-mail):xycgd888@163.com